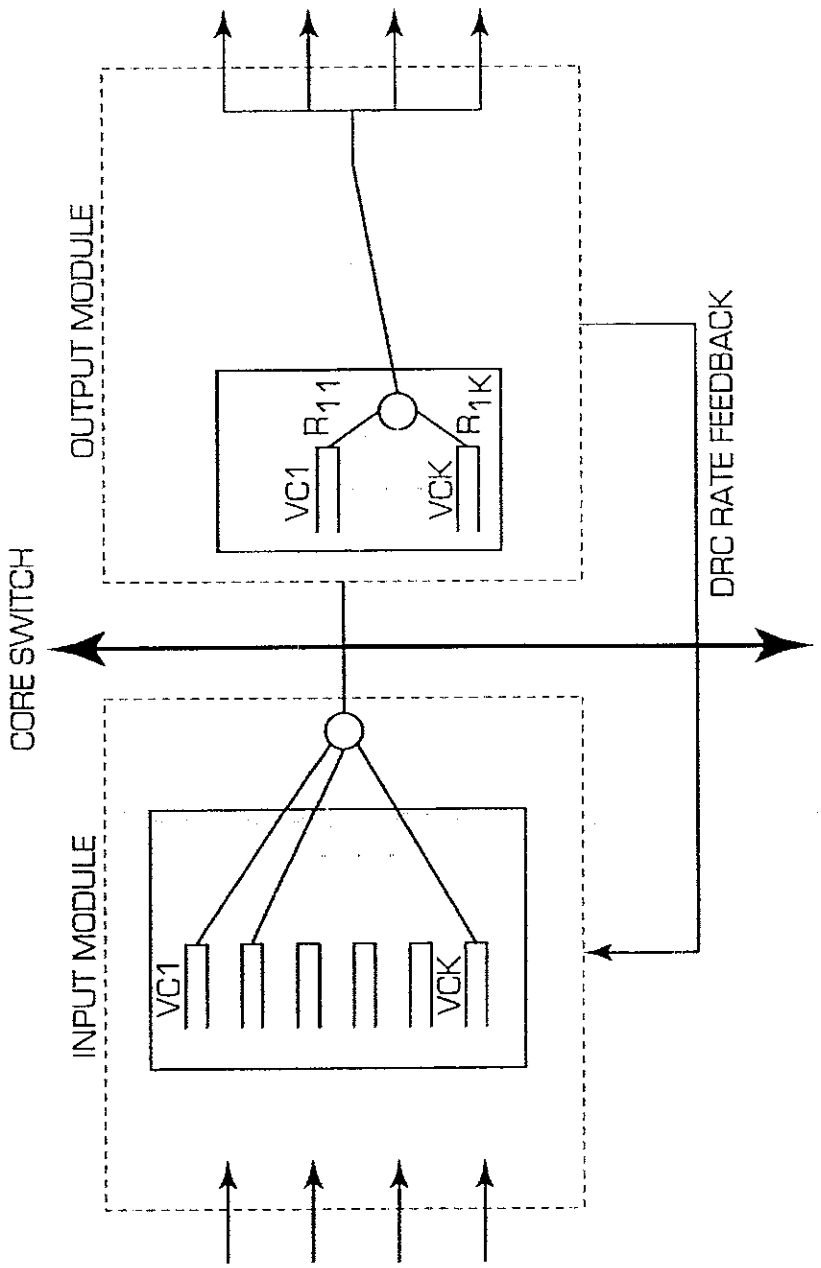
OUTPUT MODULE
VC1
R_{11}
VCK
R_{1K}
CORE SWITCH
DRC RATE FEEDBACK
INPUT MODULE
VC1
VCK

FIG. 2a

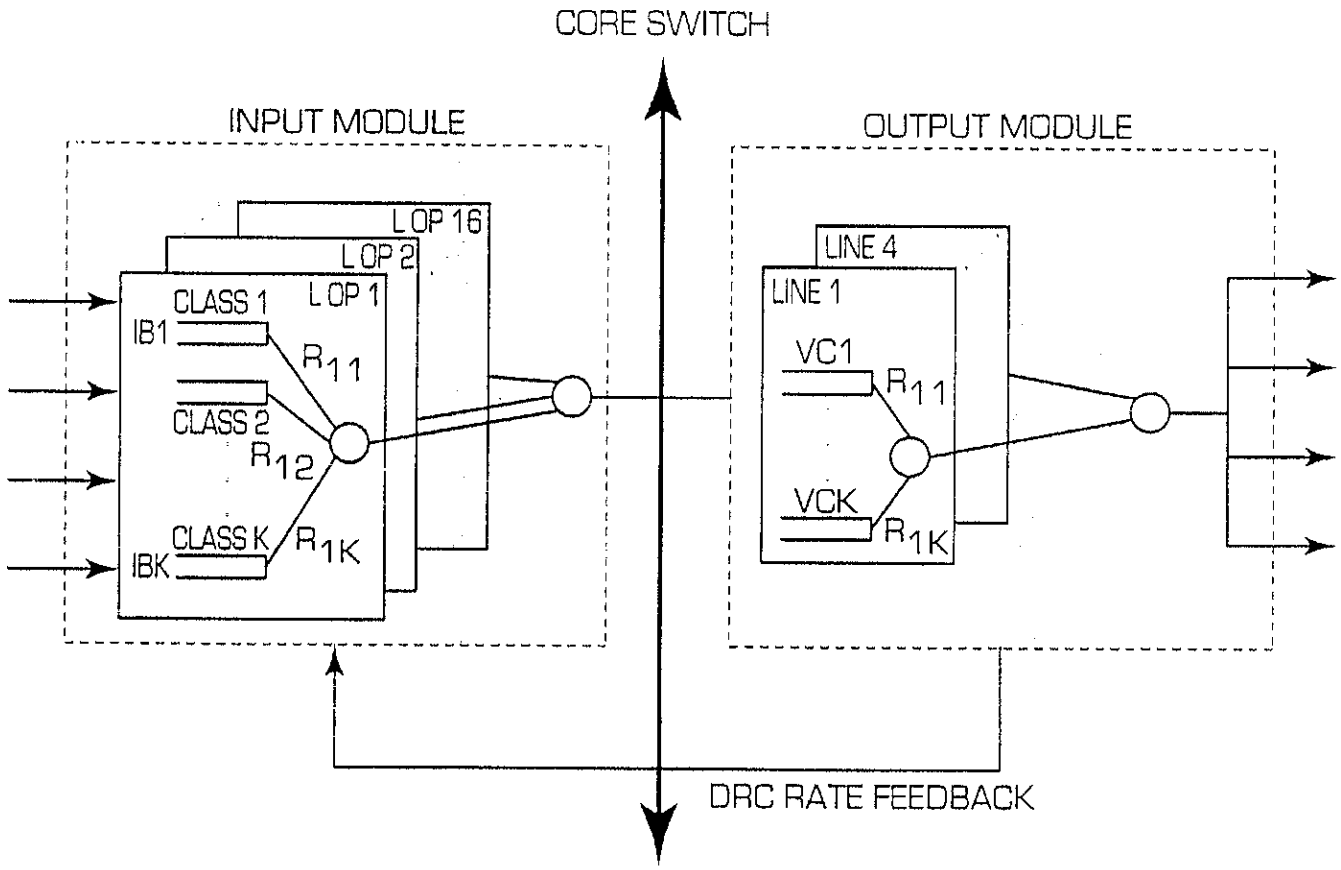
CORE SWITCH
INPUT MODULE
OUTPUT MODULE
LOP 16
LOP 2
LOP 1
CLASS 1
IB1
R11
CLASS 2
R12
CLASS K
IBK
R1K
LINE 4
LINE 1
VC1
R11
VCK
R1K
DRC RATE FEEDBACK

FIG. 2b

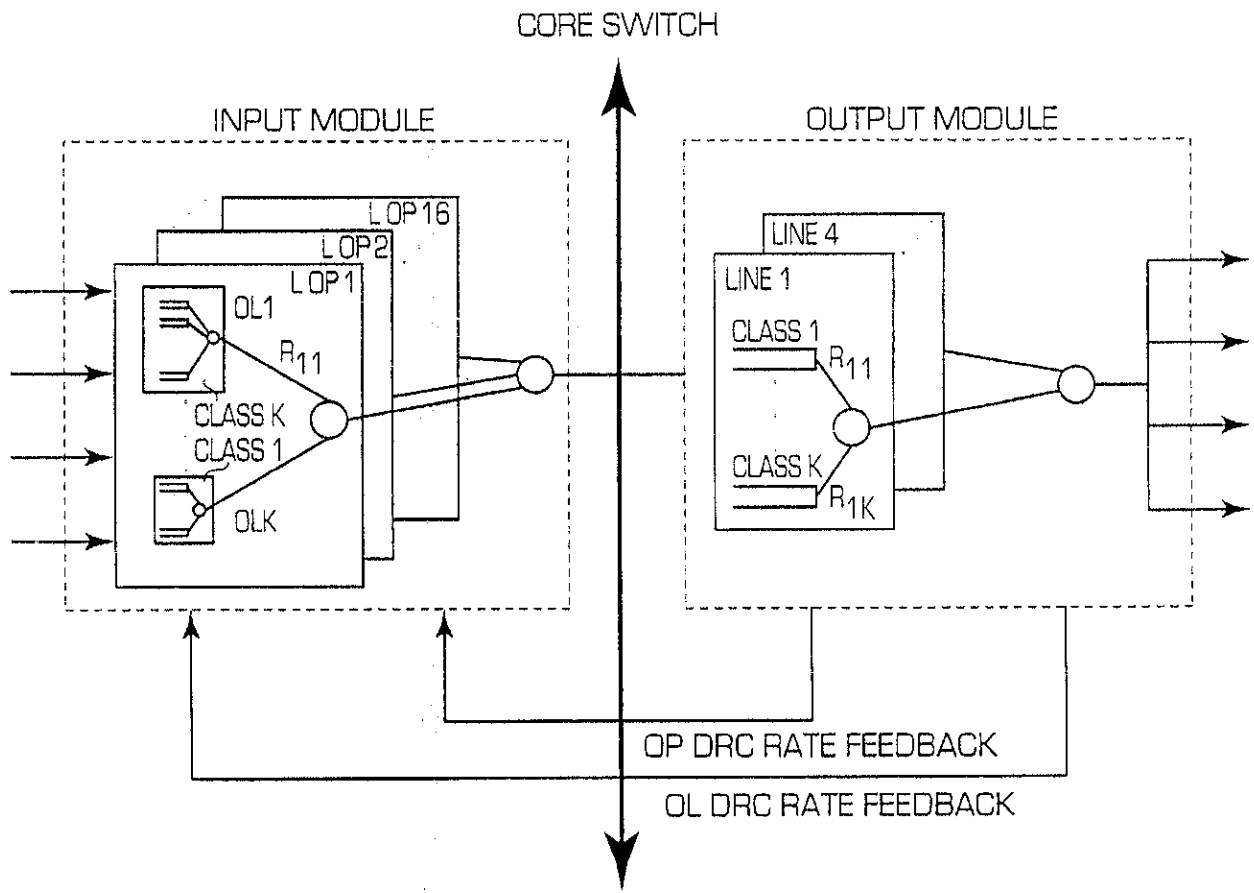
CORE SWITCH
INPUT MODULE
OUTPUT MODULE
LOP16
LOP2
LOP1
OL1
R11
CLASS K
CLASS 1
OLK
LINE 4
LINE 1
CLASS 1
R11
CLASS K
R1K
OP DRC RATE FEEDBACK
OL DRC RATE FEEDBACK

FIG. 2c

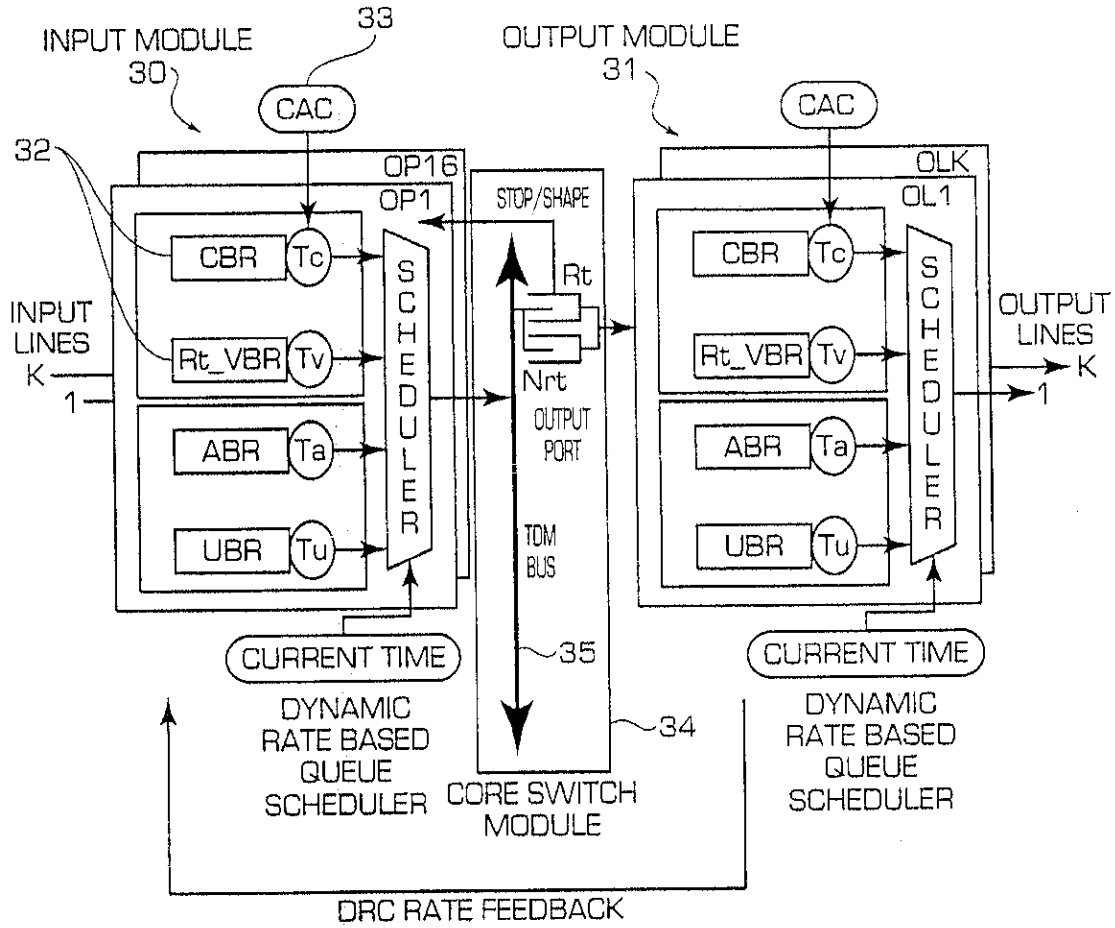
INPUT MODULE
30
33
CAC
32
OP16
OP1
CBR
Tc
Rt_VBR
Tv
ABR
Ta
UBR
Tu
SCHEDULER
INPUT LINES
K
1
CURRENT TIME
DYNAMIC RATE BASED QUEUE SCHEDULER
STOP/SHAPE
Rt
Nrt
OUTPUT PORT
TDM BUS
35
34
CORE SWITCH MODULE
OUTPUT MODULE
31
CAC
OLK
OL1
CBR
Tc
Rt_VBR
Tv
ABR
Ta
UBR
Tu
SCHEDULER
OUTPUT LINES
K
1
CURRENT TIME
DYNAMIC RATE BASED QUEUE SCHEDULER
DRC RATE FEEDBACK

FIG. 3

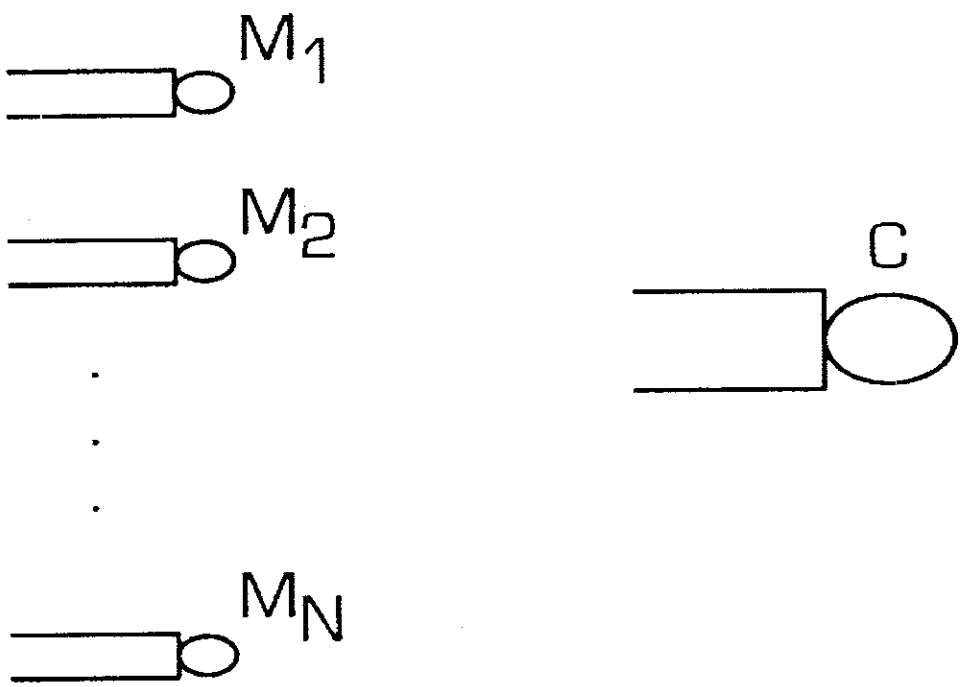

$$M_1 + M_2 + \ldots + M_N < C$$

FIG. 4

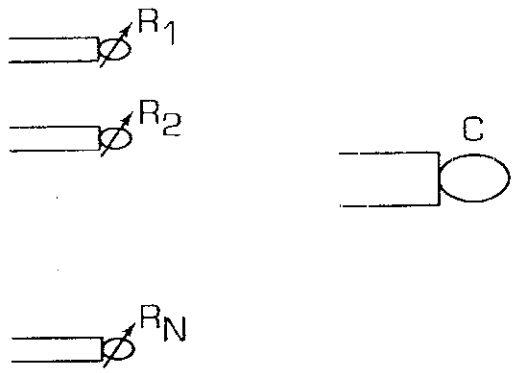

$$R_i = M_i + E_i$$
$$M_1 + M_2 + \ldots + M_N < C$$

FIG. 5

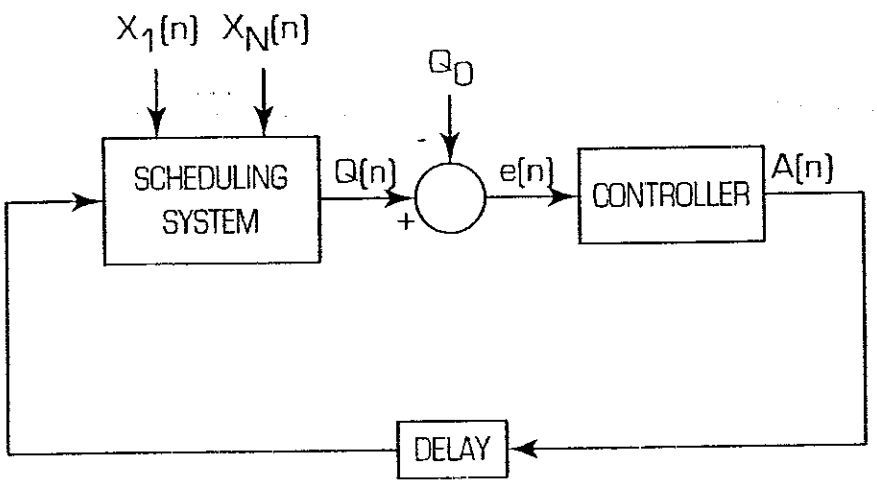

FIG. 6

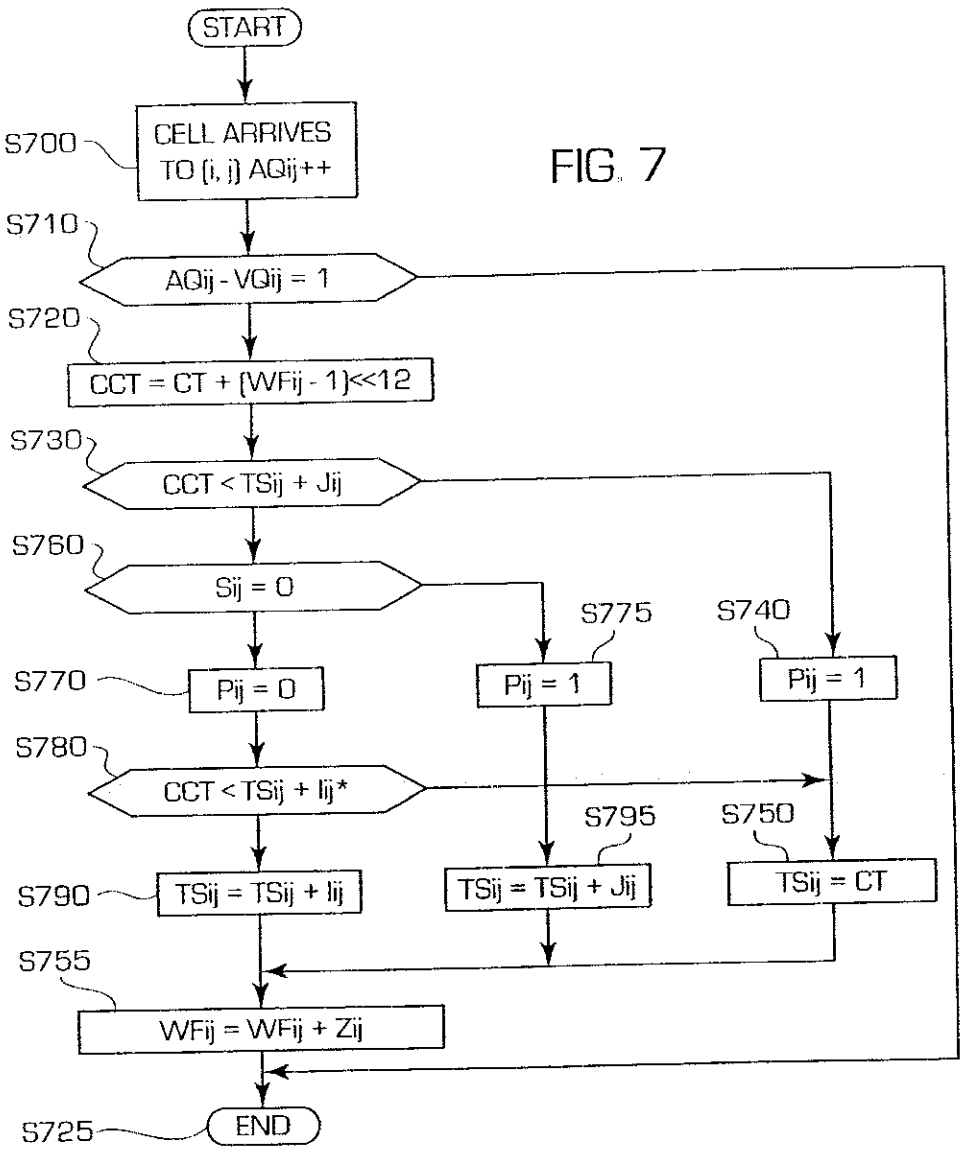
START
S700
CELL ARRIVES TO (i, j) AQij++
S710
AQij - VQij = 1
S720
CCT = CT + (WFij - 1)<<12
S730
CCT < TSij + Jij
S760
Sij = 0
S770
Pij = 0
S775
Pij = 1
S740
Pij = 1
S780
CCT < TSij + Iij*
S790
TSij = TSij + Iij
S795
TSij = TSij + Jij
S750
TSij = CT
S755
WFij = WFij + Zij
S725
END

FIG. 7

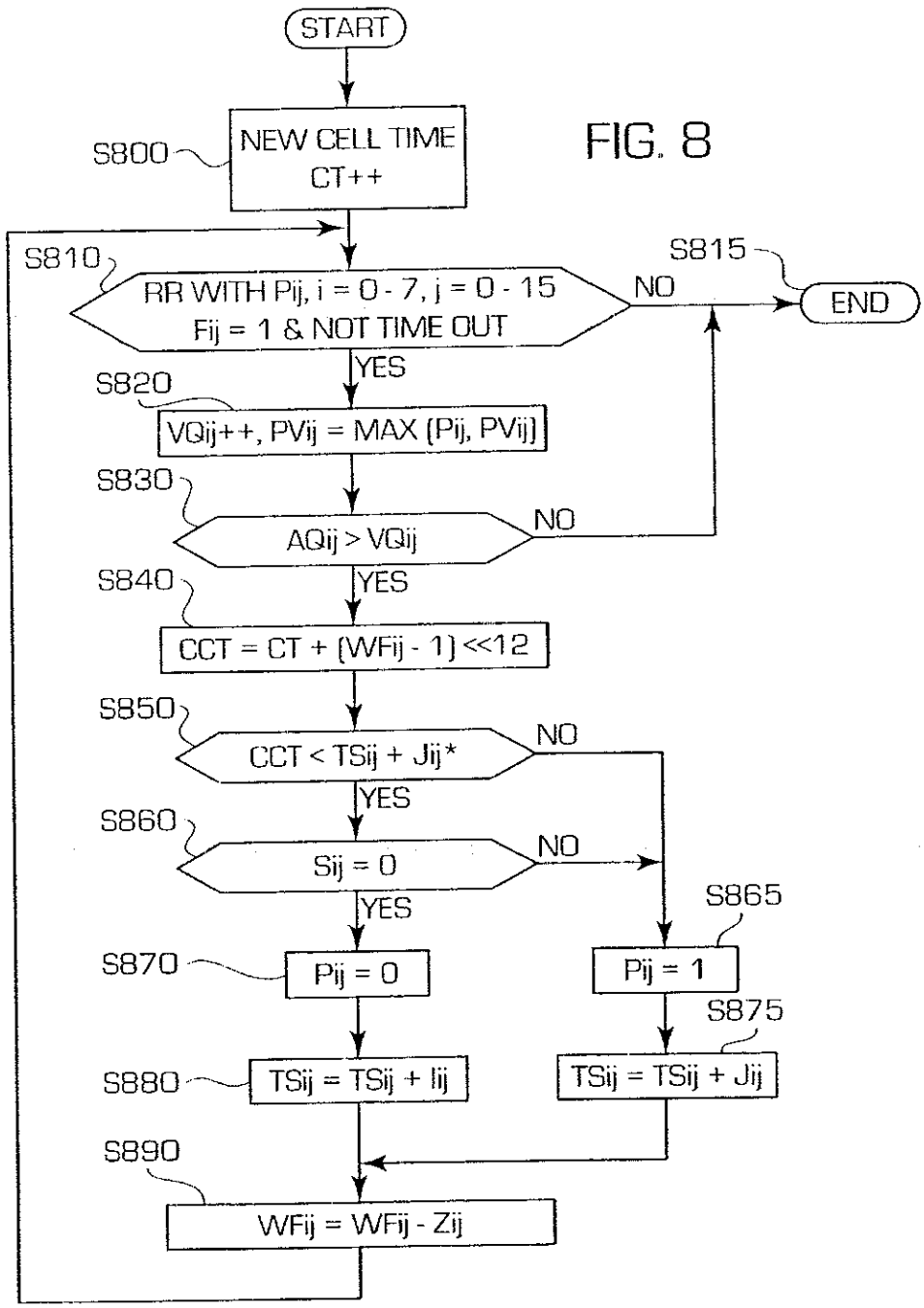
START
S800
NEW CELL TIME
CT++
S810
RR WITH Pij, i = 0 - 7, j = 0 - 15
Fij = 1 & NOT TIME OUT
NO
S815
END
YES
S820
VQij++, PVij = MAX (Pij, PVij)
S830
AQij > VQij
NO
YES
S840
CCT = CT + (WFij - 1) <<12
S850
CCT < TSij + Jij*
NO
YES
S860
Sij = 0
NO
YES
S865
S870
Pij = 0
Pij = 1
S875
S880
TSij = TSij + Iij
TSij = TSij + Jij
S890
WFij = WFij - Zij

FIG. 8

FIG. 9

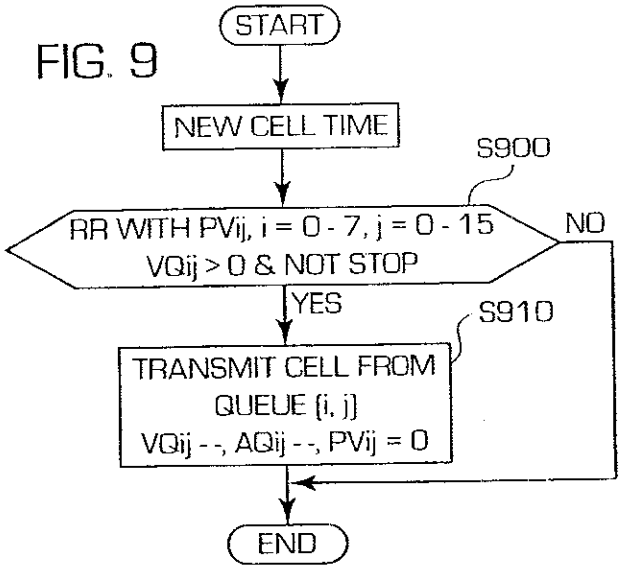
START
NEW CELL TIME
S900
RR WITH PVij, i = 0 - 7, j = 0 - 15
VQij > 0 & NOT STOP
NO
YES
S910
TRANSMIT CELL FROM
QUEUE [i, j]
VQij - -, AQij - -, PVij = 0
END

FIG. 11

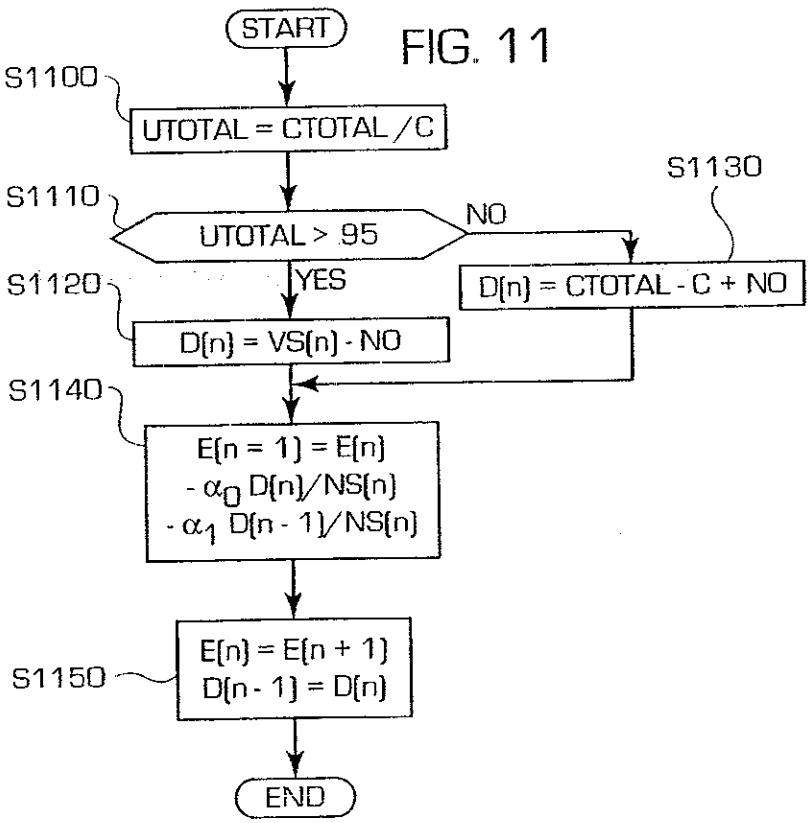
START
S1100
UTOTAL = CTOTAL / C
S1110
UTOTAL > .95
NO
S1130
D[n] = CTOTAL - C + NO
YES
S1120
D[n] = VS[n] - NO
S1140
E[n = 1] = E[n]
- α0 D[n]/NS[n]
- α1 D[n - 1]/NS[n]
S1150
E[n] = E[n + 1]
D[n - 1] = D[n]
END

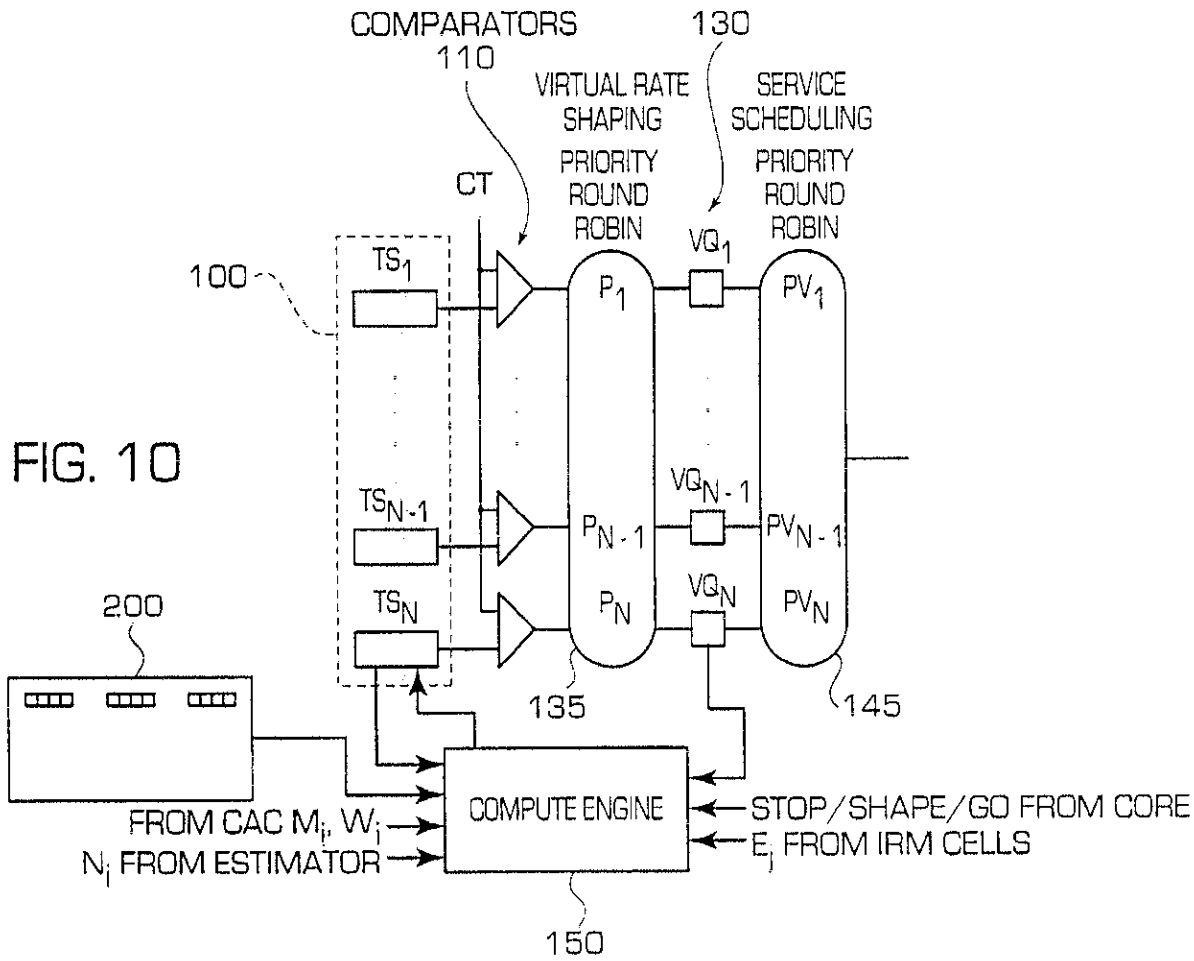
COMPARATORS
110
130
VIRTUAL RATE SHAPING
SERVICE SCHEDULING
PRIORITY ROUND ROBIN
PRIORITY ROUND ROBIN
CT
100
TS1
TSN-1
TSN
P1
PN-1
PN
VQ1
VQN-1
VQN
PV1
PVN-1
PVN
135
145
200
COMPUTE ENGINE
FROM CAC Mi, Wi
Ni FROM ESTIMATOR
STOP/SHAPE/GO FROM CORE
Ej FROM IRM CELLS
150

FIG. 10

FIG. 12

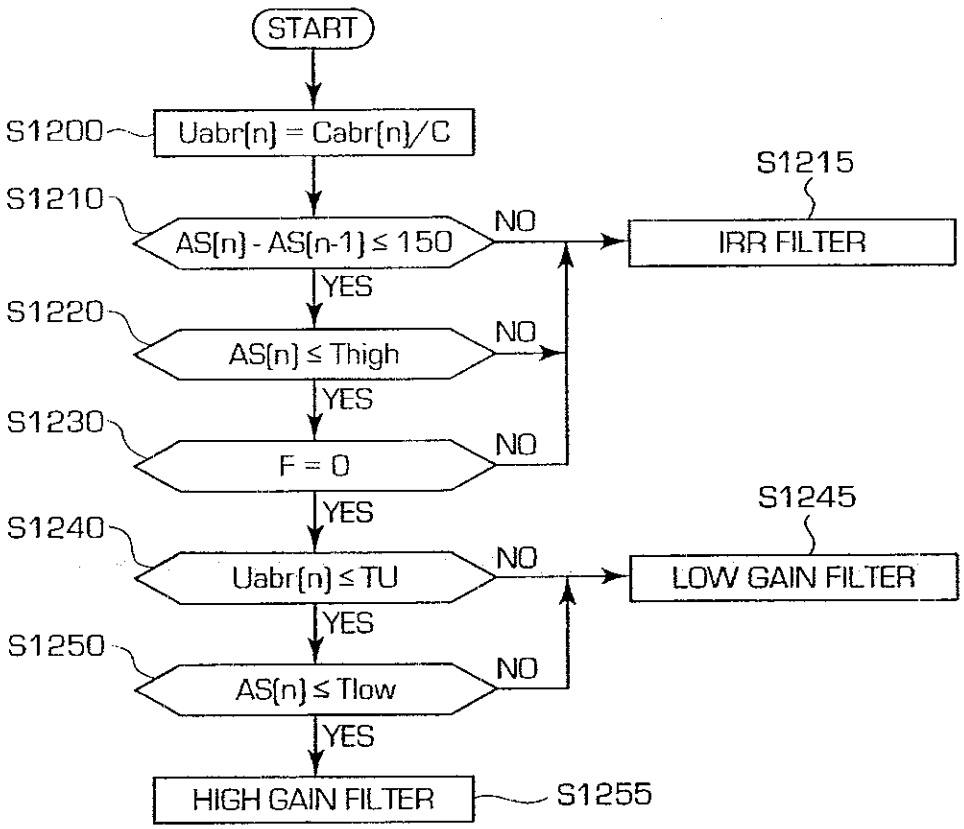
START
S1200
Uabr(n) = Cabr(n)/C
S1210
AS(n) - AS(n-1) ≤ 150
NO
S1215
IRR FILTER
YES
S1220
AS(n) ≤ Thigh
NO
YES
S1230
F = 0
NO
YES
S1240
Uabr(n) ≤ TU
NO
S1245
LOW GAIN FILTER
YES
S1250
AS(n) ≤ Tlow
NO
YES
HIGH GAIN FILTER
S1255