FIG. 13

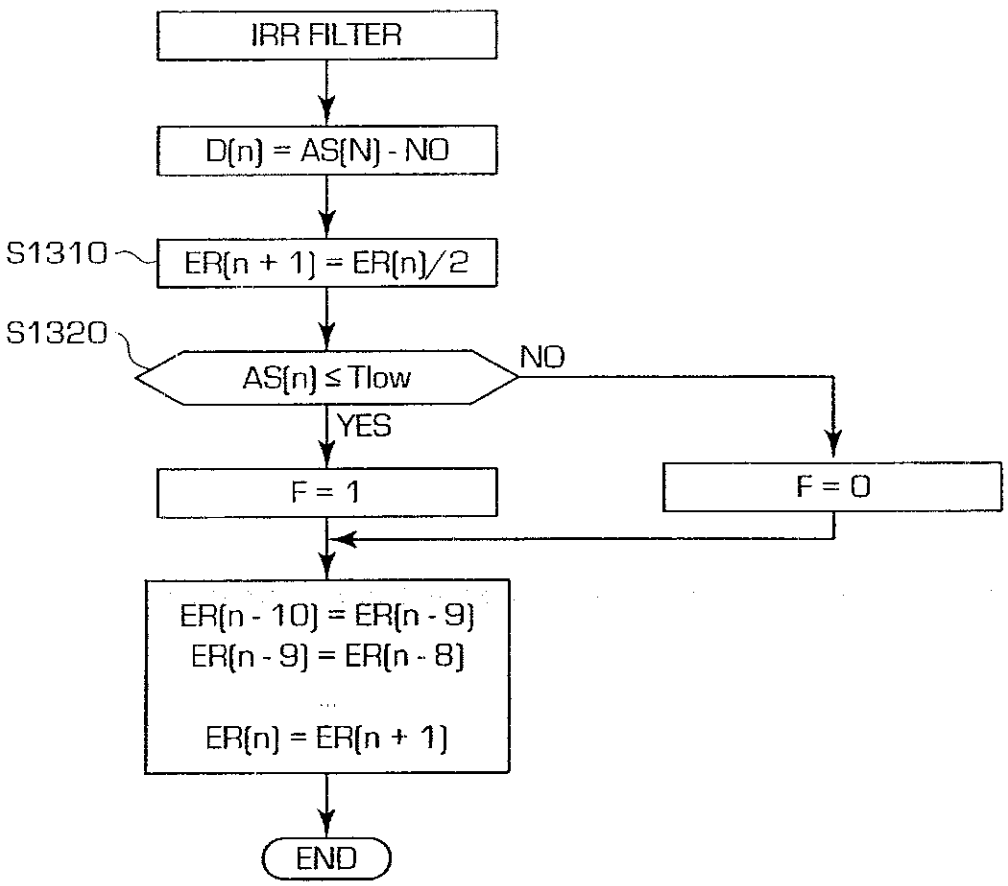
IRR FILTER
D(n) = AS(N) - NO
S1310
ER(n + 1) = ER(n)/2
S1320
AS(n) ≤ Tlow
NO
YES
F = 1
F = 0
ER(n - 10) = ER(n - 9)
ER(n - 9) = ER(n - 8)
...
ER(n) = ER(n + 1)
END

FIG. 14

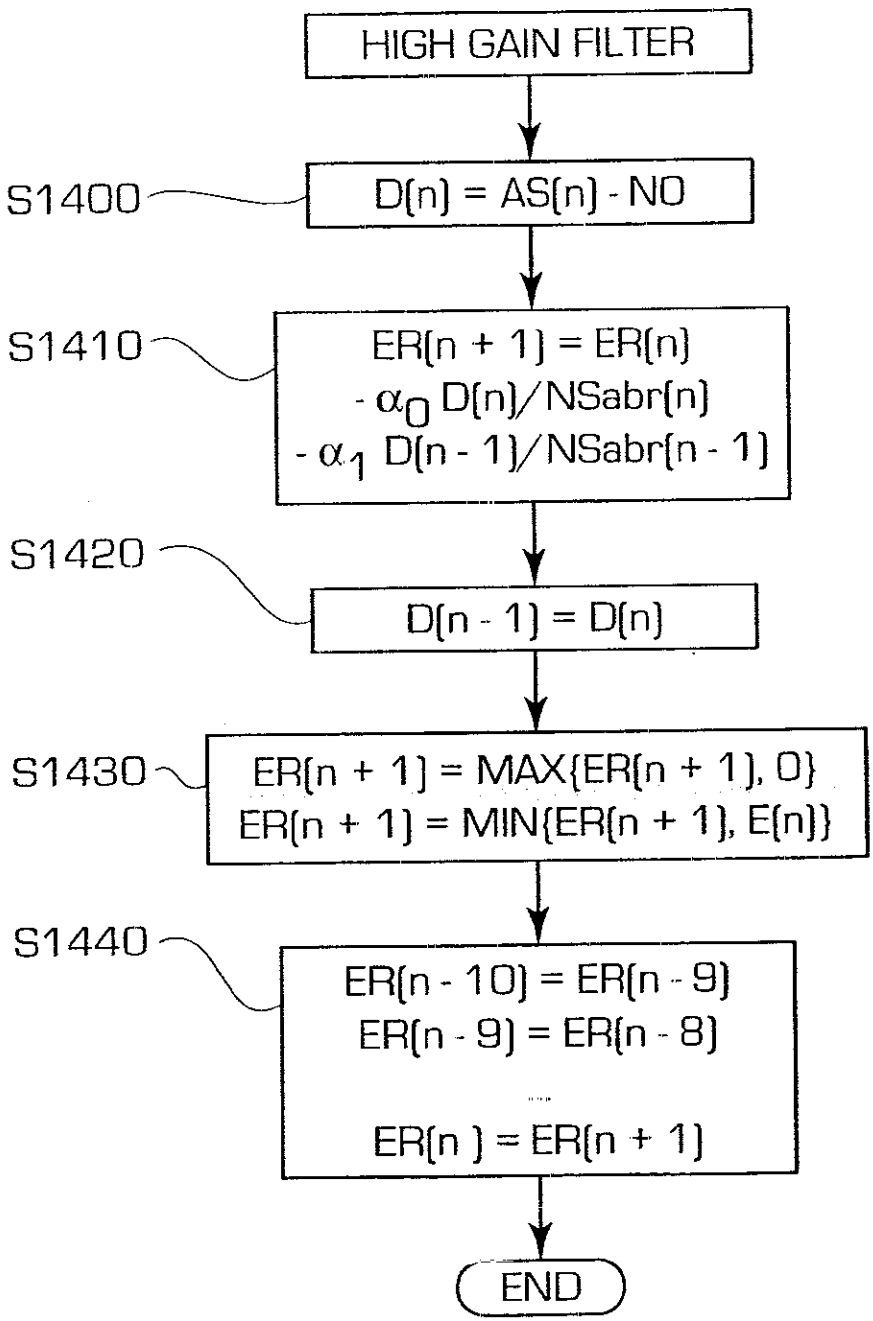
HIGH GAIN FILTER
S1400
D(n) = AS(n) - NO
S1410
ER(n + 1) = ER(n)
- α0 D(n)/NSabr(n)
- α1 D(n - 1)/NSabr(n - 1)
S1420
D(n - 1) = D(n)
S1430
ER(n + 1) = MAX{ER(n + 1), 0}
ER(n + 1) = MIN{ER(n + 1), E(n)}
S1440
ER(n - 10) = ER(n - 9)
ER(n - 9) = ER(n - 8)
ER(n ) = ER(n + 1)
END

FIG. 15

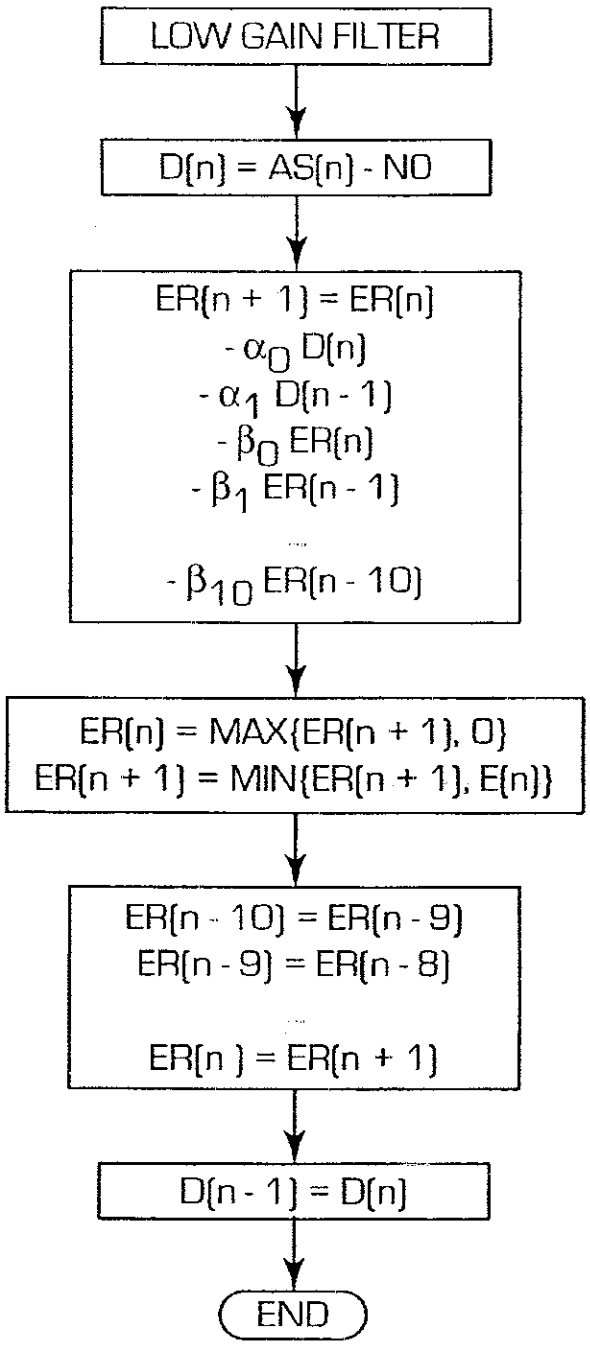
LOW GAIN FILTER
D(n) = AS(n) - NO
ER(n + 1) = ER(n)
- α0 D(n)
- α1 D(n - 1)
- β0 ER(n)
- β1 ER(n - 1)
...
- β10 ER(n - 10)
ER(n) = MAX{ER(n + 1), 0}
ER(n + 1) = MIN{ER(n + 1), E(n)}
ER(n - 10) = ER(n - 9)
ER(n - 9) = ER(n - 8)
...
ER(n ) = ER(n + 1)
D(n - 1) = D(n)
END

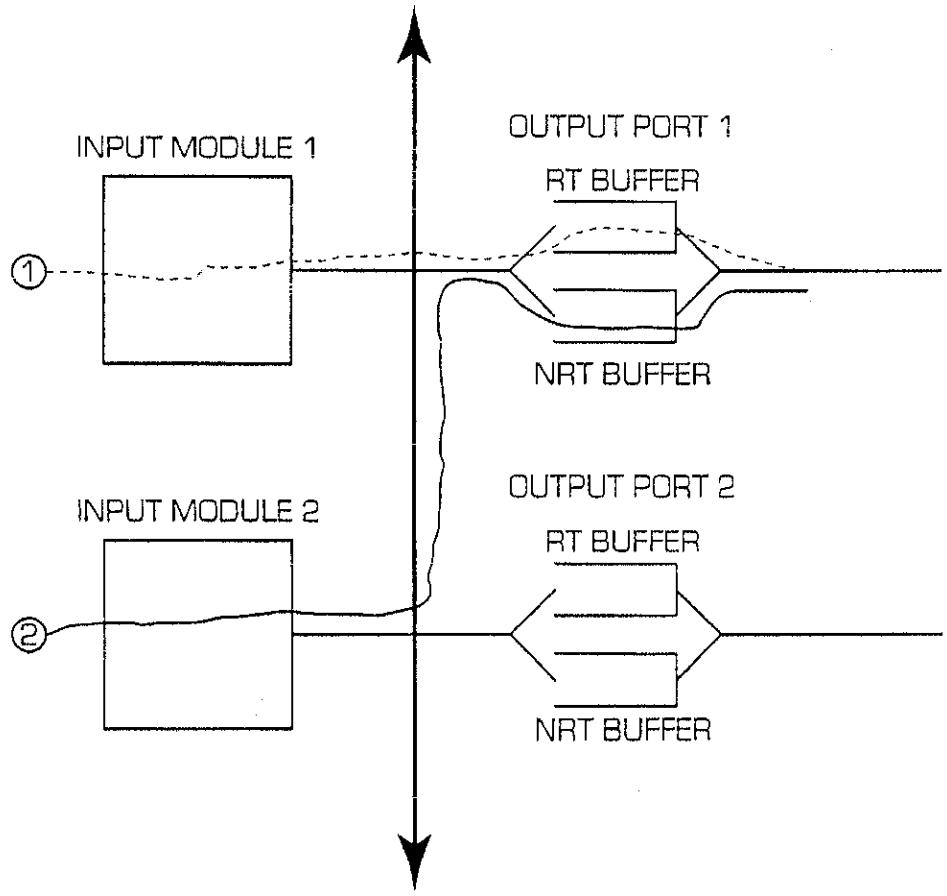
INPUT MODULE 1
OUTPUT PORT 1
RT BUFFER
NRT BUFFER
INPUT MODULE 2
OUTPUT PORT 2
RT BUFFER
NRT BUFFER
1
2

FIG. 16

FIG. 17

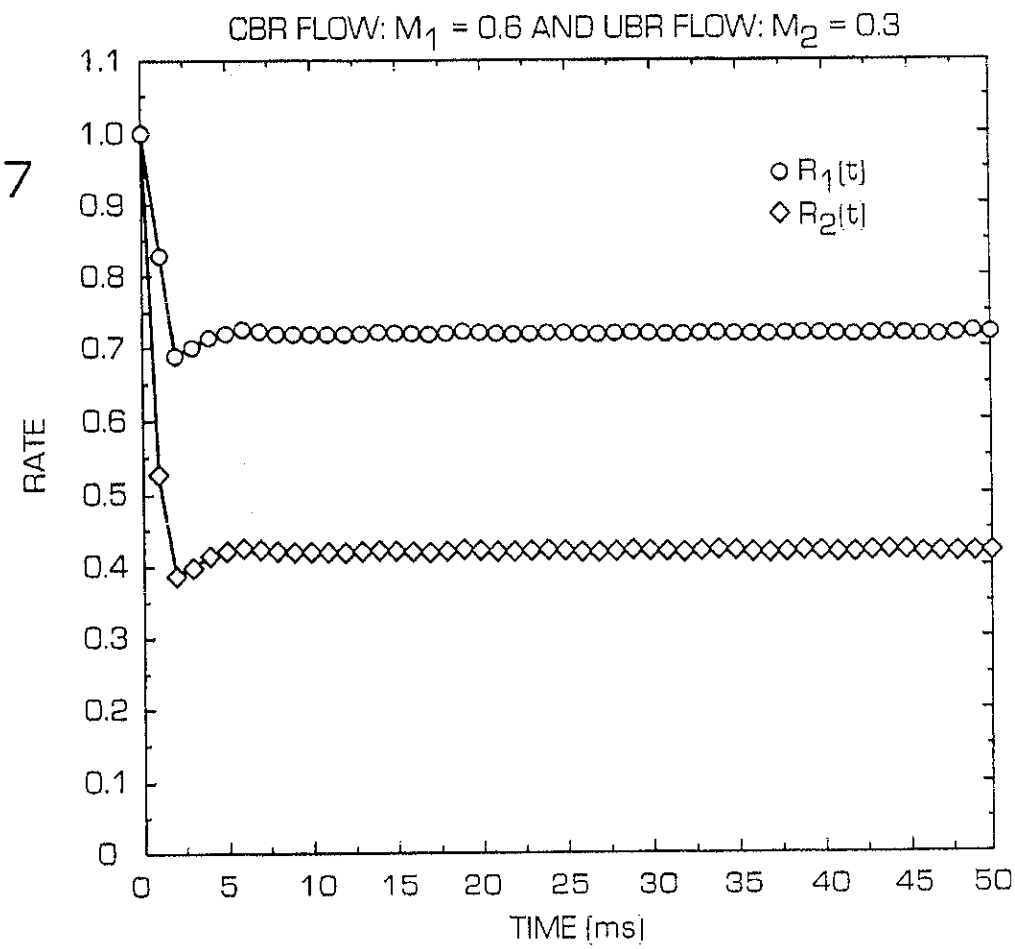
CBR FLOW: $M_1$ = 0.6 AND UBR FLOW: $M_2$ = 0.3
RATE
TIME (ms)
$R_1(t)$
$R_2(t)$
0
0.1
0.2
0.3
0.4
0.5
0.6
0.7
0.8
0.9
1.0
1.1
0
5
10
15
20
25
30
35
40
45
50

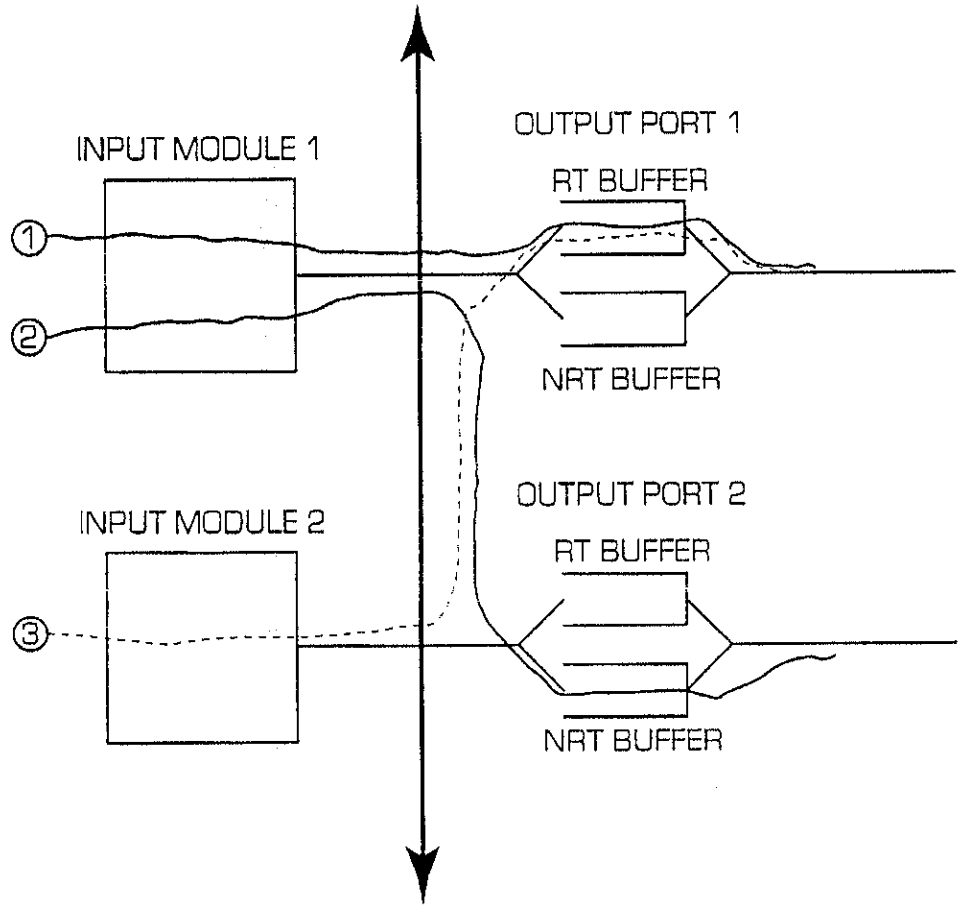
INPUT MODULE 1
OUTPUT PORT 1
RT BUFFER
NRT BUFFER
INPUT MODULE 2
OUTPUT PORT 2
RT BUFFER
NRT BUFFER
1
2
3

FIG. 18